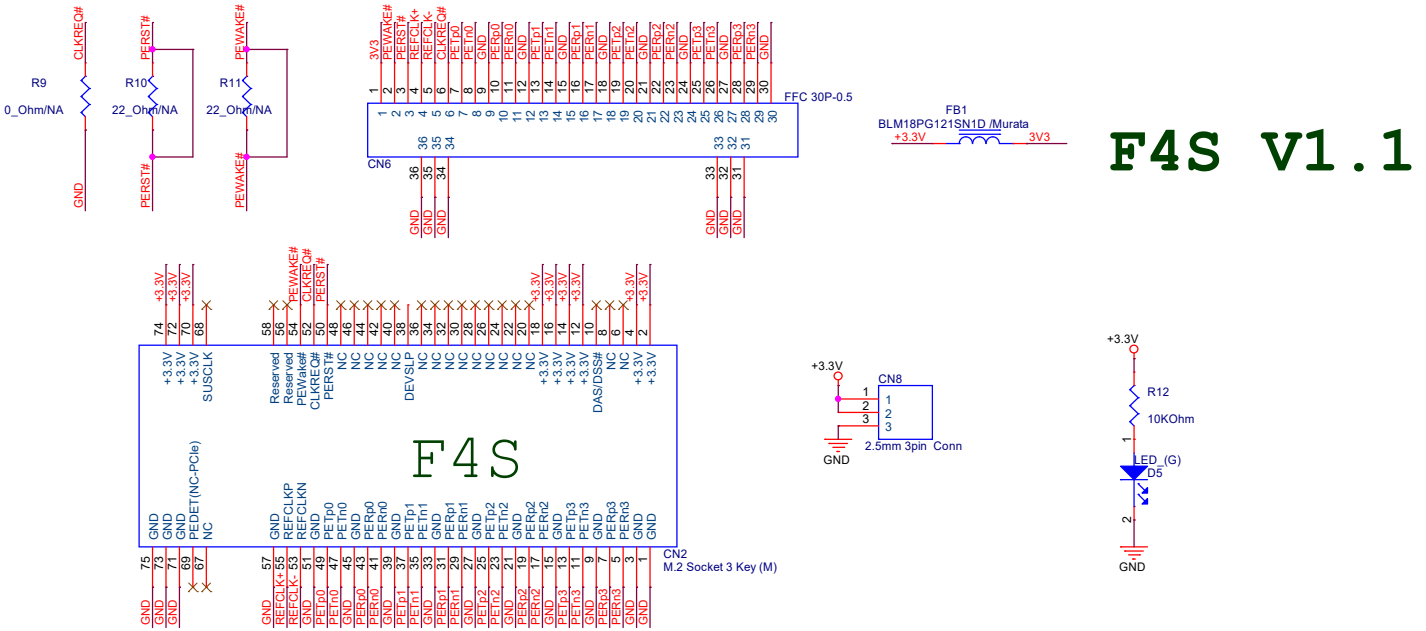

F4S V1.1

PCB Model Name: F4S V1.1
Product Name: M.2 NVMe Extender

Rivision History

Date	Version	Description
2024Oct14	1.0	First Release

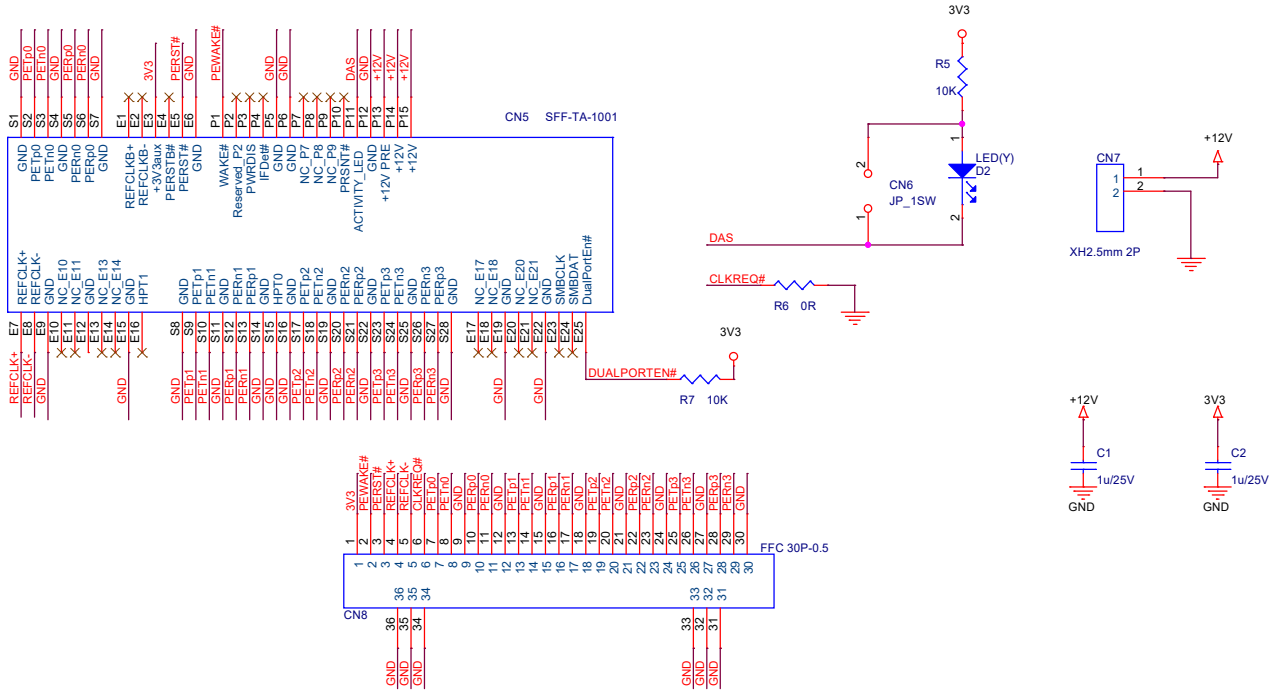

PCB Model Name: F7M V1.0
Product Name: U.3 NVMe Extender

Rivision History

Date	Version	Description
20240806	1.0	First Release